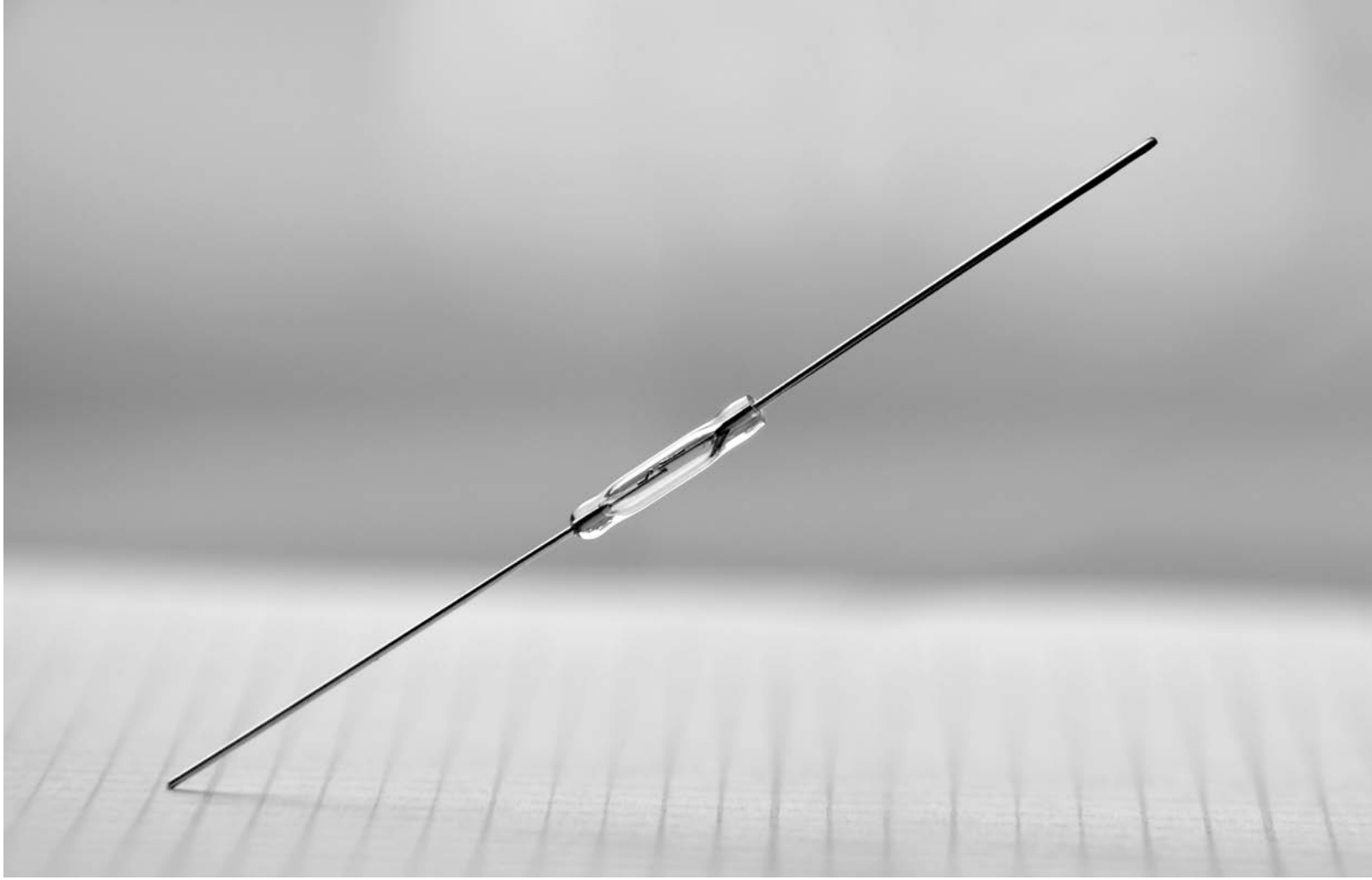

Standex-Meder Electronics

Custom Engineered Solutions for Tomorrow

Standex MEDER ELECTRONICS | Custom Engineered Solutions for Tomorrow

WE MATTER.™
www.standexmeder.com

Form B & Latching Reed Relays & Sensors

Product Training

Standex MEDER ELECTRONICS | Custom Engineered Solutions for Tomorrow

Introduction

Table of Contents

- What are the key features of Form B and latching Relays and Sensors?
- Why is the magnet so important?
- Why is the coil so important?
- The hysteresis of the Reed Switch – the best way to understand Form B and latching action

Overview

- Form B and latching Reed Relays and Sensors all use magnetic biasing.
- In the case of the Form B the magnets will be biased strong enough to close the contacts.
- It will take an external magnet of equal strength and opposite polarity to open the Reed Switch in a Sensor Application.
- In the case of a Form B Relay, it will take a coil of equal and opposite strength to open the contacts.
- In both cases, no current or external energy is expended when the Reed is in the closed position.

Overview

- For a latching Sensor or latching Relay the magnet does not bias the Reed Switch so that it is fully closed.
- It biases the Reed so that it is partially closed, but not making contact.
- In this case, for a Sensor an external magnet must be brought in aiding the biasing magnet.
- And for the Relay a latching coil must be connected to aid the biasing magnet to fully close the contacts.

Form B Reed Relay

- Below a Form B Reed Relay is shown.
- As shown, no power is required to keep the contacts closed.

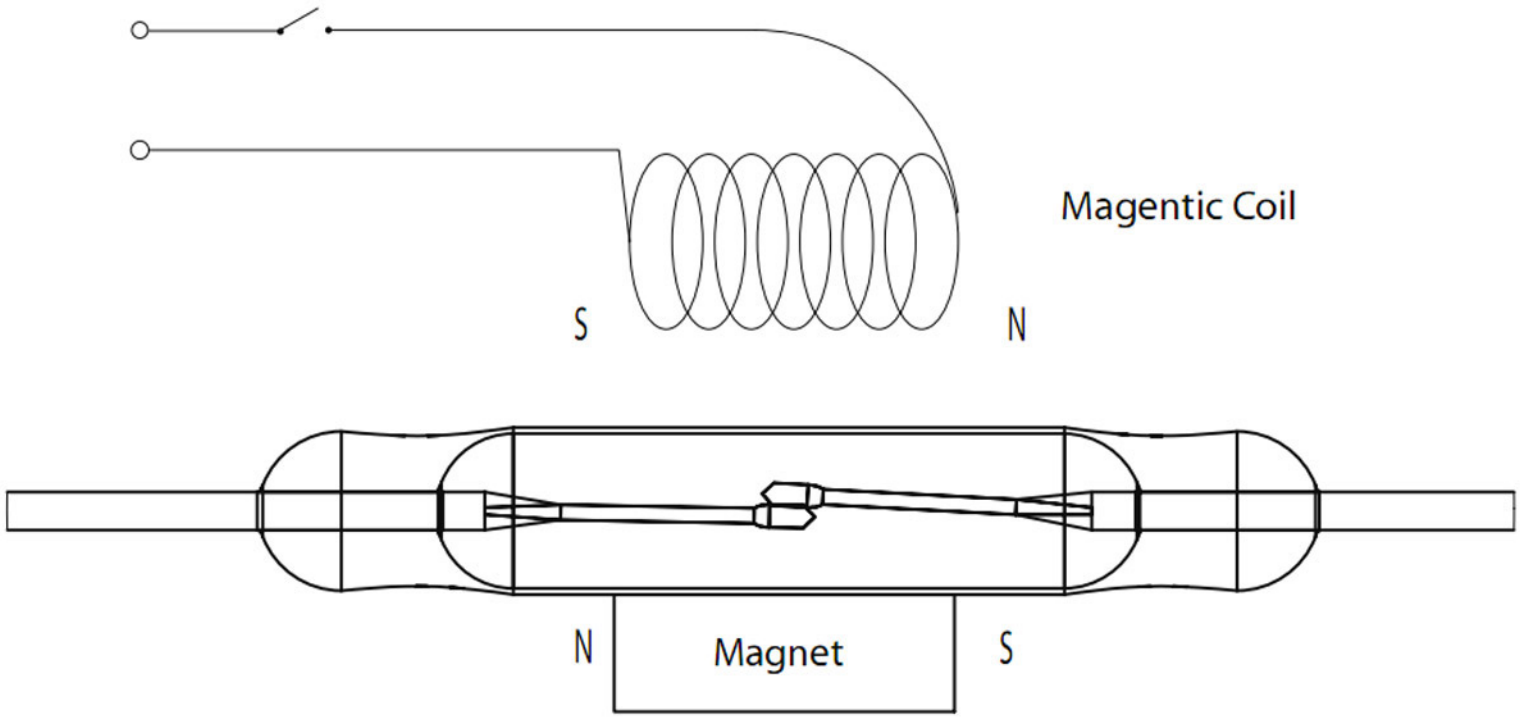

Form B Reed Relay – the magnet

- The choice of a suitable magnet is the first step
- As is the case with Form B and latching, the magnet is placed directly onto the glass of the Reed.
- In this case only a relatively weak magnetic field is needed to close the contacts.
- Generally the magnet will not be at full strength. It will be de-magnetized to a suitable strength for proper operation.
- The stable AlNiCo magnets are usually best for the magnetizing and demagnetizing adjustment that needs to take place.

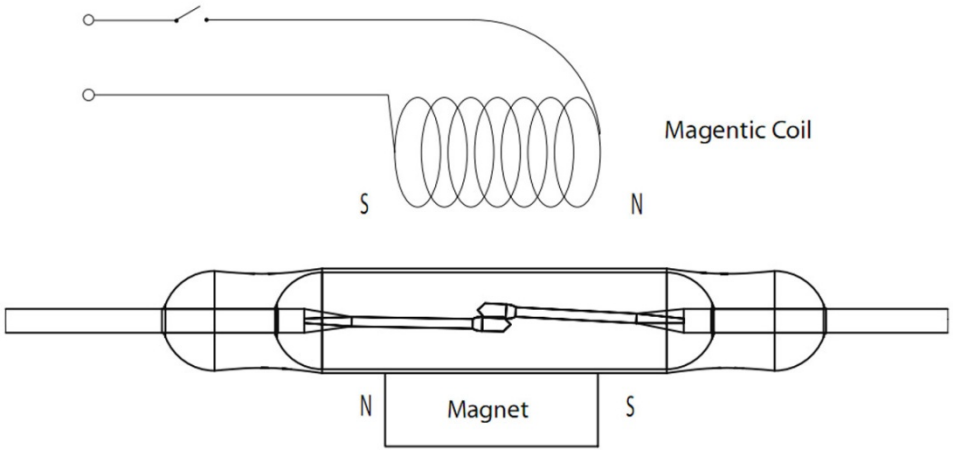

Form B Reed Relay – the coil

- Applying coil power opens the contacts.
- Care must be taken to make sure the polarity of the coil is maintained so that an opposing field is created negating the magnetic field of the magnet.
- Here the winding direction of the coil must be consistent, and must be specified in the work instructions. The spec must call out the voltage polarity to the coil. Reversing the coil polarity - the Relay will not function.

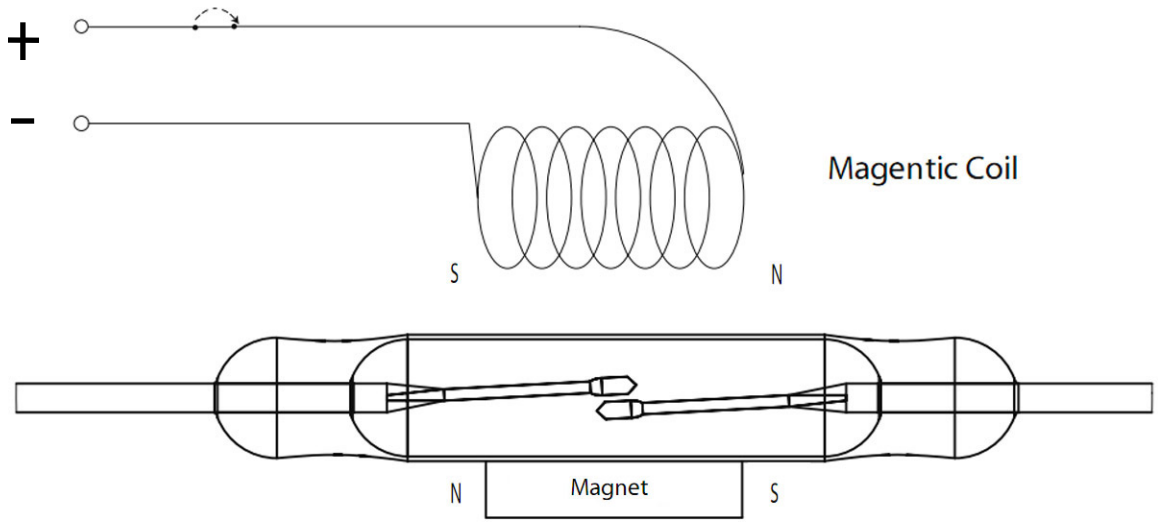

Form B Reed Relay – the coil

- Also care must be taken not to make the coil too strong. Why?
  - Too strong a coil will actually cause the contacts to re-close.
  - Generally, applying 50% above the nominal should not re-close the contacts.
  - Actually the use of a shorter magnet will improve the re-closure (requiring a higher coil voltage to be applied for re-closure to occur).
  - Shown here the contacts have re-closed with excessive nominal voltage.

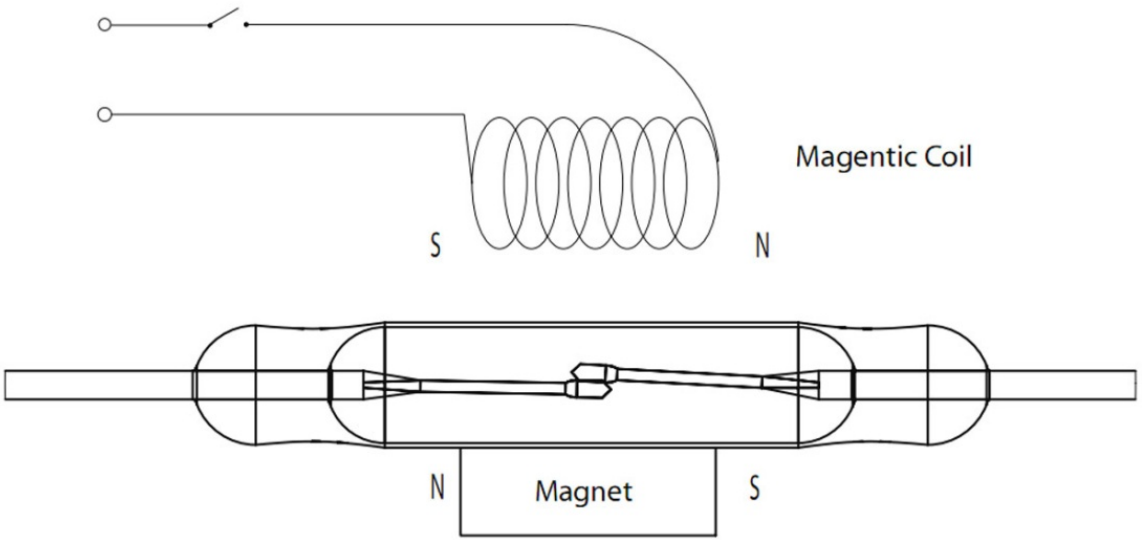

Form B Reed Relay – the switch

- The best way to understand Form B and latching action is to picture the hysteresis of the Reed Switch.
- This hysteresis is the key component for the proper operation of a Form B and latching.
- For starters, one needs to select a relatively wide hysteresis reed switch. 50% or below is best.
- The wider the hysteresis (lower percentage) the easier it is to tune the magnet for proper operation.

Form B Reed Relay – proper operation

- The graph below shows the contact state and how it is influenced by the magnetic fields.
- First, in this example we have selected a 4 mT pull-in and a 2mT drop-out reed switch (blue lines) (AT?).
- The magnet is suitably adjusted to apply 5 mT field to the reed switch.
- This magnetic field is strong enough to close the contacts (its state is shown in stage 1).

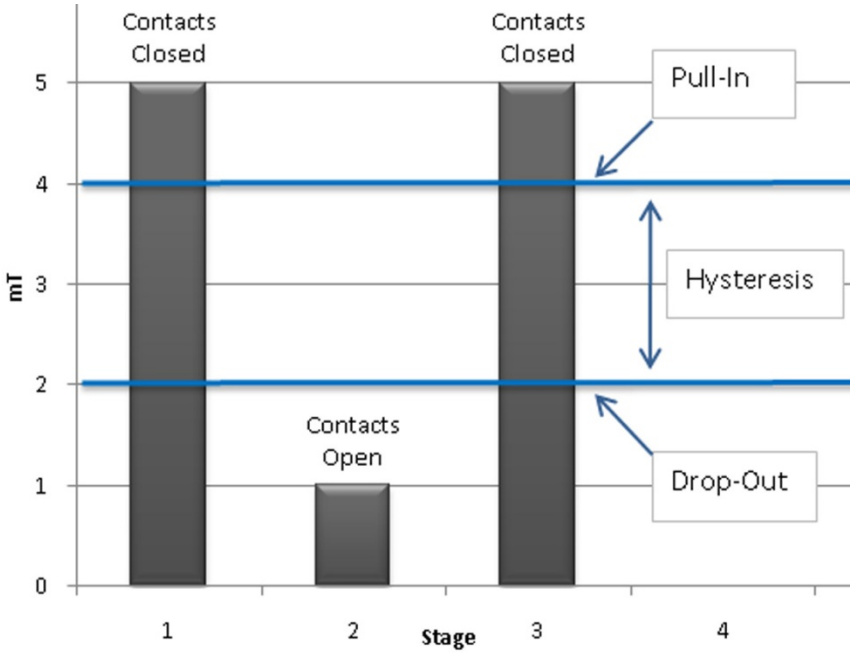

Form B Reed Relay – proper operation

- Now in stage 2 the coil is energized applying a magnetic field strength of 4 mT.
- This magnetic field is opposite the field of the magnet leaving a net field strength of 1 mT.
- In stage 3 we remove the coil power.
- The net field strength returns to the 5 mT from the magnet.
- Can you tell me why the coil has not affected the strength of the magnet?

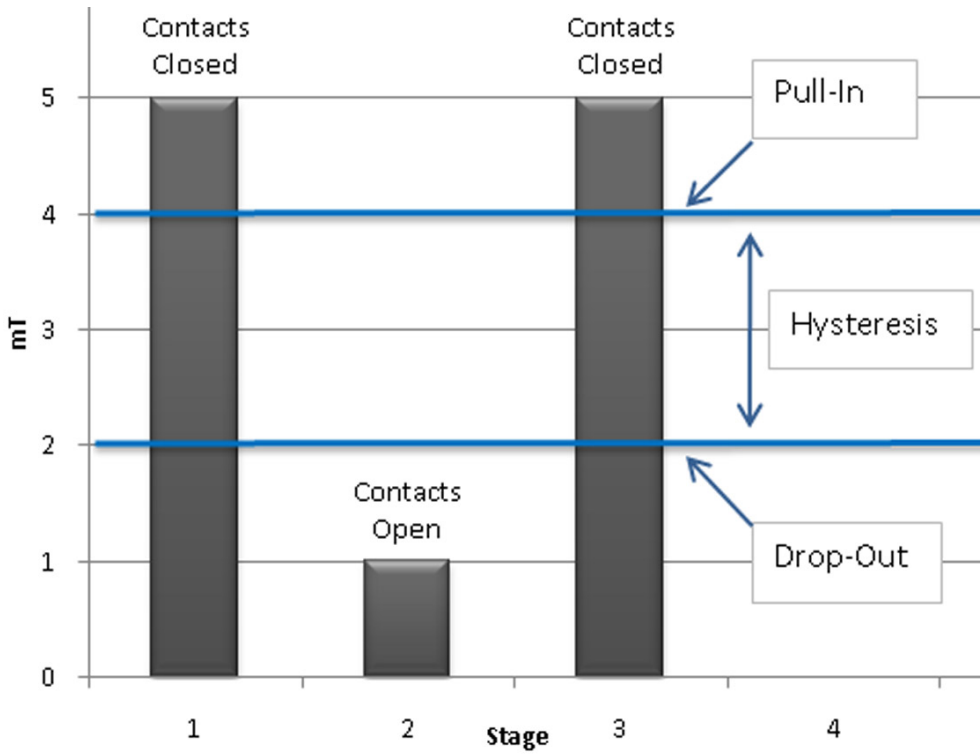

Form B Reed Relay – proper operation

- Based on this example in the graph, can you tell me what coil field strength is needed to create a re-closure of the contacts?
- 10 mT
- In this graph you can see how the closure and opening operate directly above and below the hysteresis of the reed switch.
- Again its worth pointing out the importance of the reed switch hysteresis.

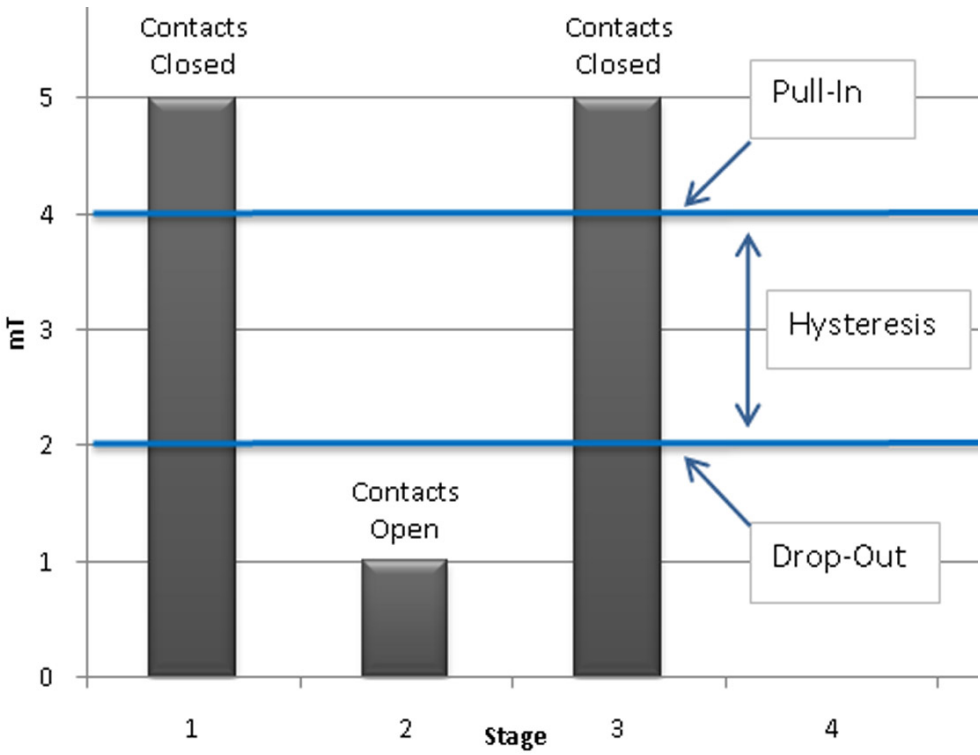

Latching Relays

- This graph shows the relationship of pull-in, drop-out and hysteresis for a group of reeds with various mT sensitivities.

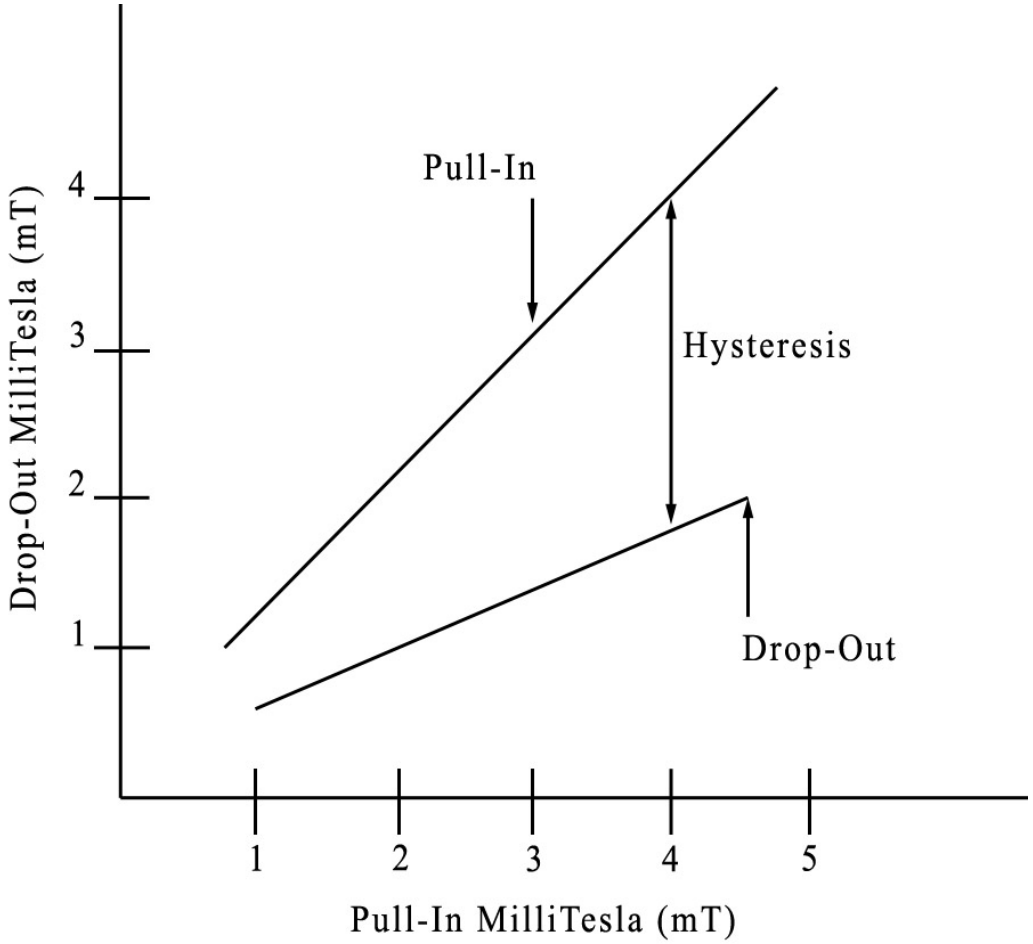

Latching Relays

- The points we discussed for Form B relay almost all carry over to the latching relay.
- The significant difference to change the state of the reed switch, only a pulse of 1 millisecond to 1.5 milliseconds needs to be applied across the coil.
- Secondly, usually a bifilar coil is used, where one coil closes the contacts and the other coil opens the contacts. This is accomplished by using opposite polarities to each coil.
- One can use only one coil. However, it requires our customer to have the ability to apply a positive polarity to the coil, and then have the ability to apply a negative polarity to the same coil. In this case, the magnetic polarity is reversed.

Latching Relays

- As seen here, a voltage pulse is applied to the coil generating an aiding field to the magnet closing the contacts.
- As seen here a second coil of equal and opposite polarity is used to generate a magnetic field opposite to the one that latched the coil and thereby opening the contacts.

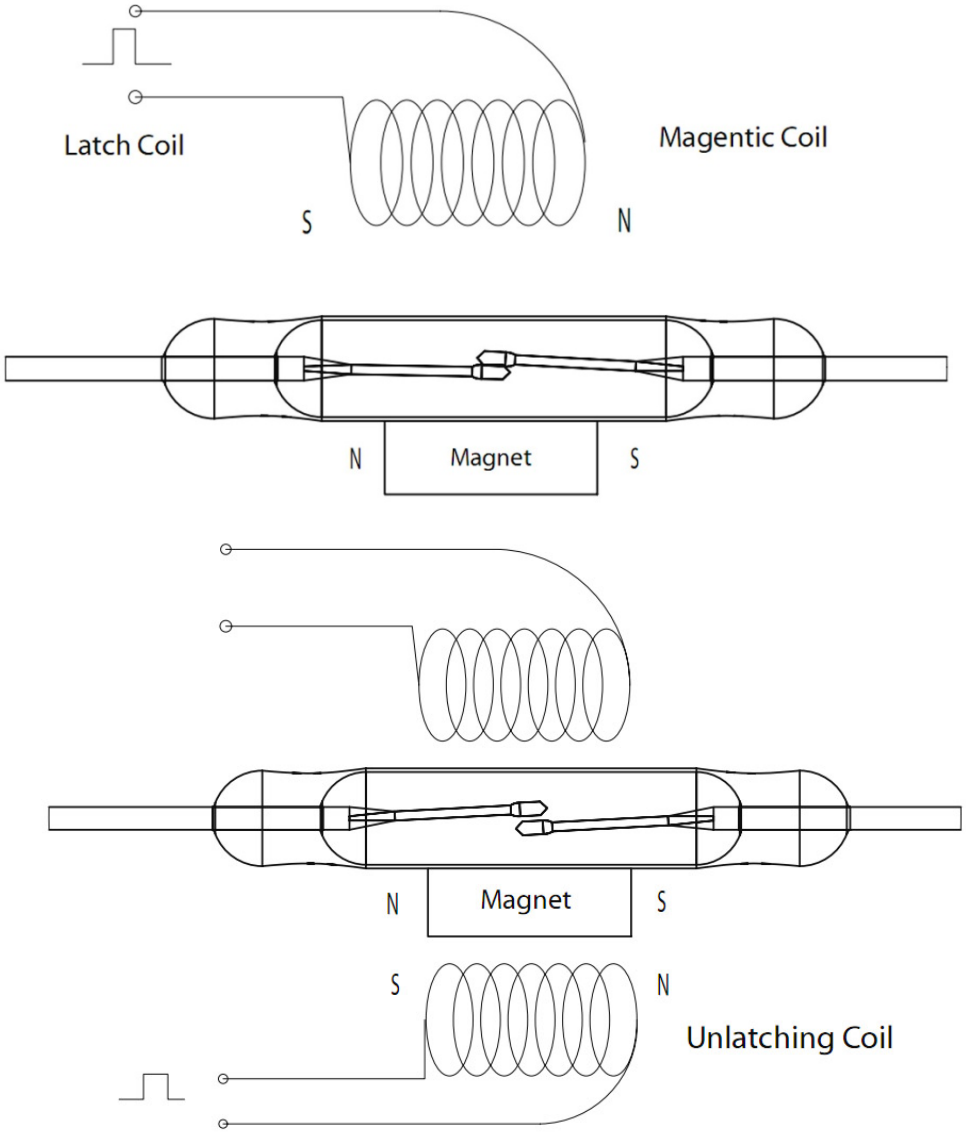

Latching Relays – proper operation

- Again, the best way to understand what is happening is look at each of the stages as in the example below.
- As you can see from the graph we use a reed switch with a pull-in of 4 mT and a drop-out of 2 mT.
- Here in stage 1, we show the magnet has applied a magnetic field strength of 3 mT to the switch, which is not enough to close the contacts.
- In stage 2 a latching pulse of 2 mT is applied through the latching coil to the reed switch.

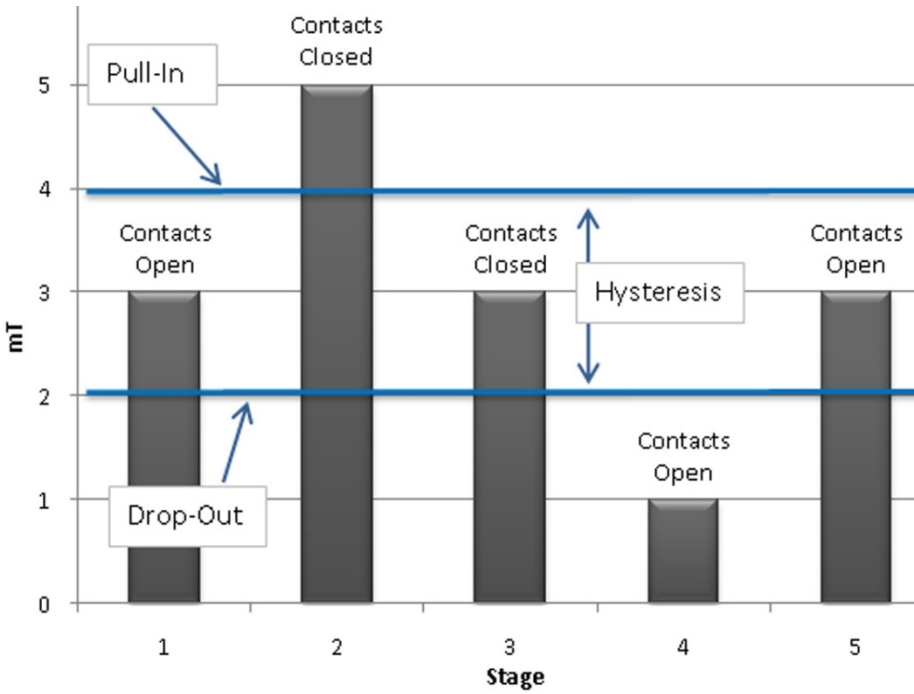

Latching Relays – proper operation

- This latching magnetic field aids the existing magnetic field from the permanent magnet combining for a net field strength of 5 mT.
- This added field is sufficient to close the contacts.
- In stage 3 we now see the net magnetic field after the latching pulse in gone is back to 3 mT.
- However, in this case, the contacts stay closed, because the field strength never dropped below the drop out level of the contacts at 2 mT.

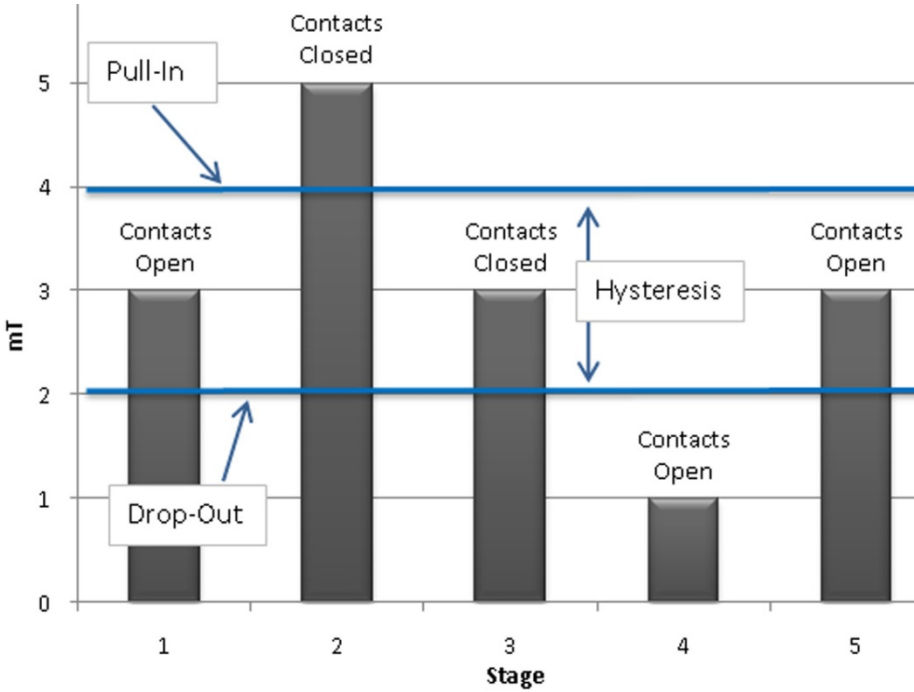

Latching Relays – proper operation

- In stage 3, the contacts will stay at this level for as long as the customer would like, and with the added benefit of no power being used.
- In stage 4 an unlatching coil pulse of 2 mT is applied to the contacts opposite in polarity to the latch pulse.
- Now the net field strength is reduced to 1 mT.
- As can be seen this is now below the drop-out level of the reed switch.
- The contacts open.

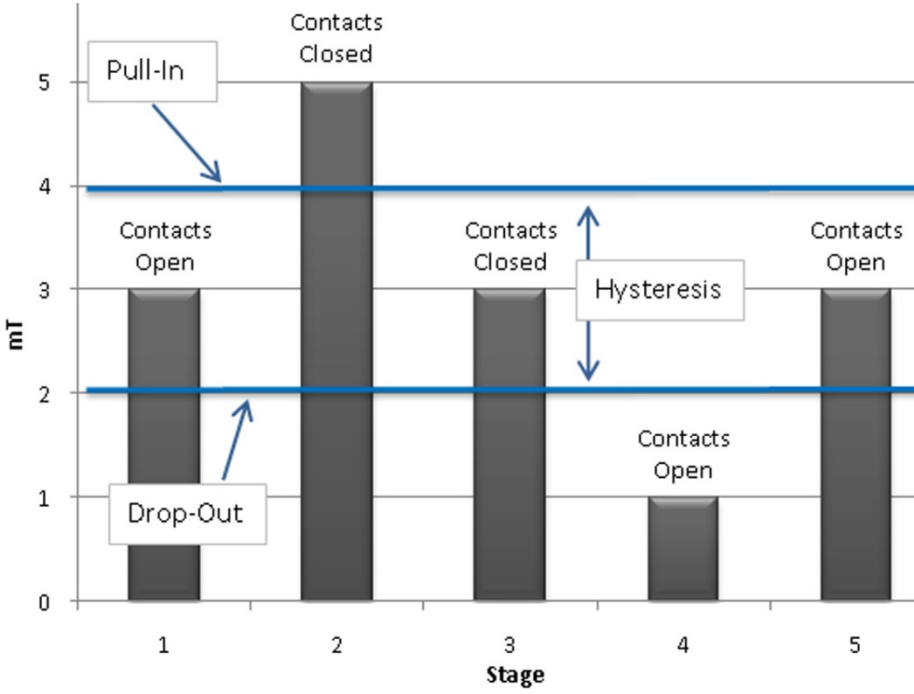

Latching Relays – proper operation

- Stage 5 shows the resultant magnetic field left after the unlatching pulse is gone.
- The field is back to the beginning field of 3 mT that is generated by the permanent magnet.
- As can be seen the hysteresis of the reed switch plays a key role in accomplishing a good latching relay. They relay uses minimal power.
- Latching relays as can be seen use relatively week coils to accomplish their task.

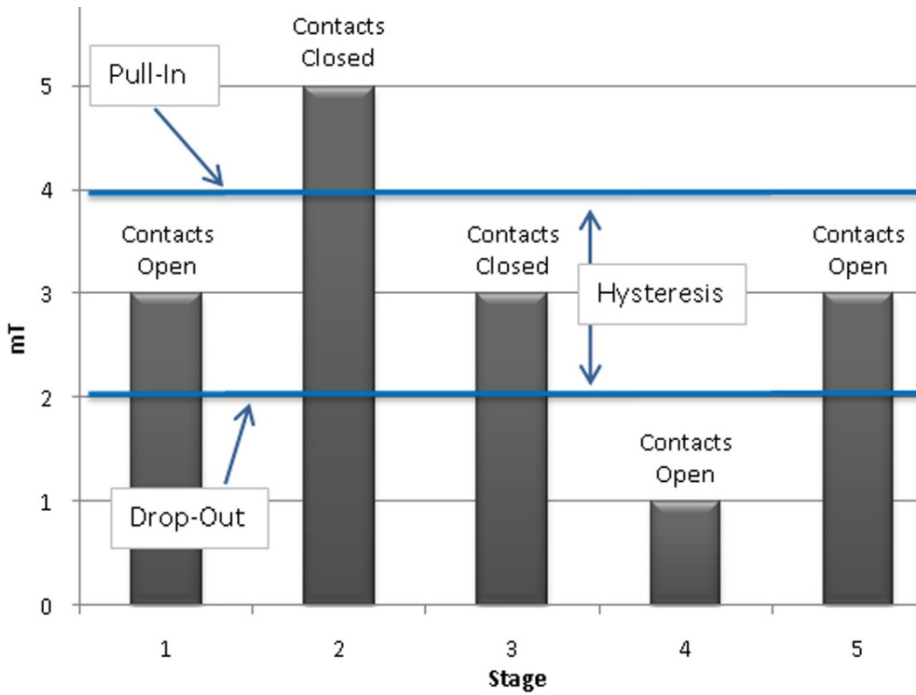

Latching Relays – proper operation

- Do we need to worry about the re-closure?
- As stated, these coils are very weak, so it would take a very large voltage to effectively create a strong enough field. And since it is only a pulse the effect would be gone anyway.
- Furthermore, using higher voltages would not make sense in an energy conscious design.

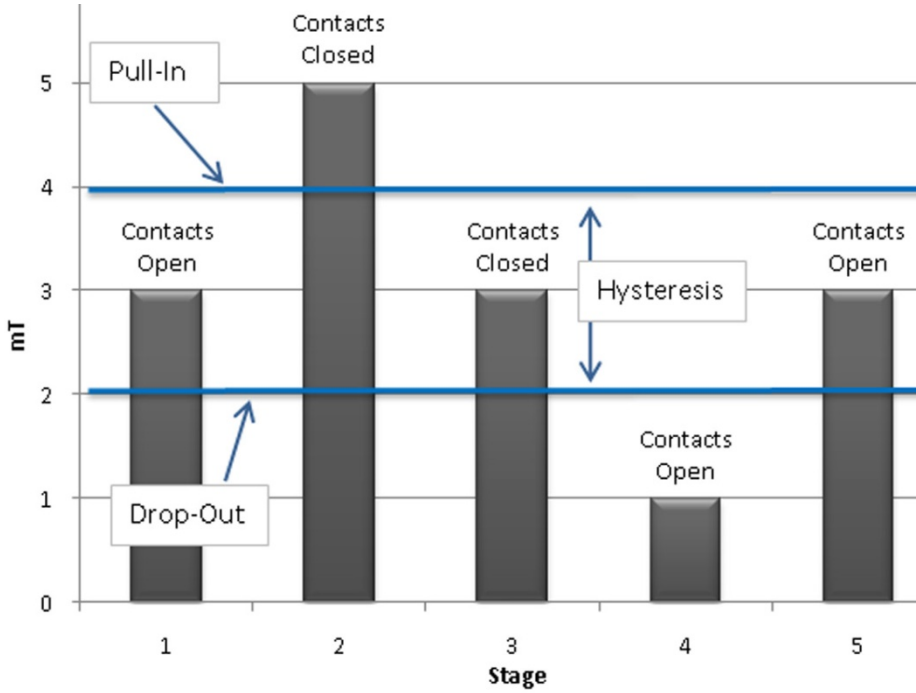

Form B Reed Sensors

- Form B reed sensors follow the same rules as with the Form B relay.
- We start with a magnet that has been magnetized to a suitable level closing the contacts.

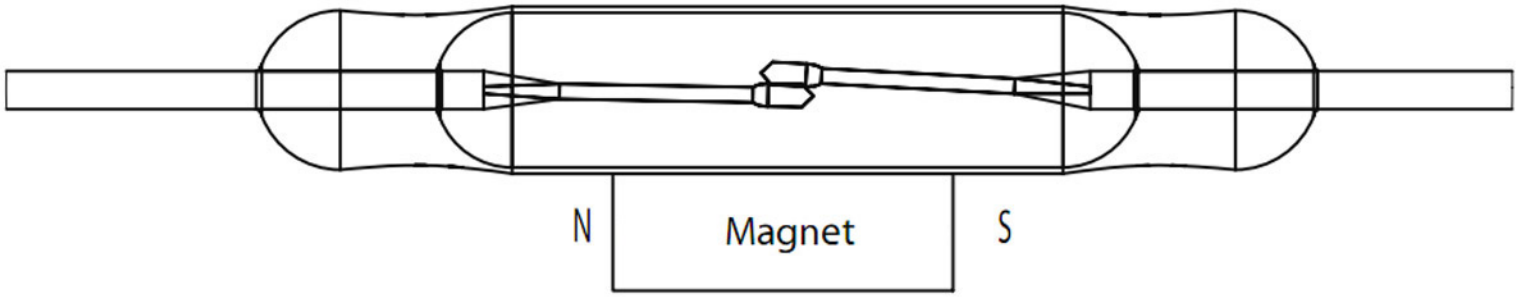

Form B Reed Sensors

- Here a magnet of opposite polarity is brought into the existing magnetic field canceling it out and thereby opening the contacts.
- Care must be taken not to use too strong a magnet, otherwise the contacts may re-close.
- Also, care must be taken in selecting which operate and release magnetic lobe one is using, since there are physically several operate and release lobes to contend with.

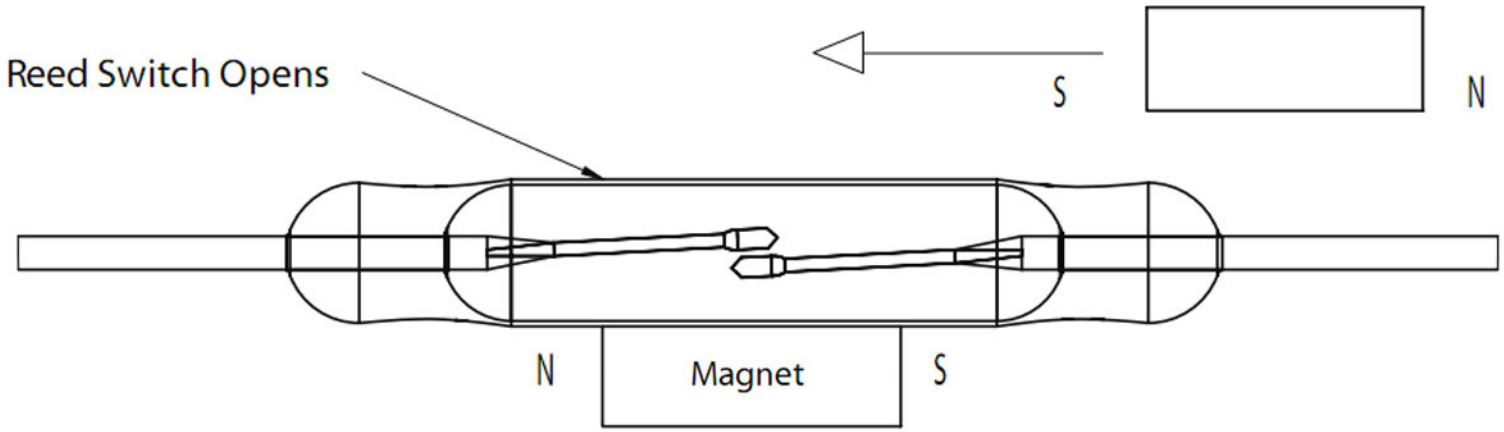

Form B Reed Sensors

- Removing the second magnet, the contacts revert back to their initial closed state.
- Using high mT pull-in switches may give the most stable conditions. The higher pull-in mT will give a wider hysteresis.
- The customer design criteria is most important and should direct the details of the design.

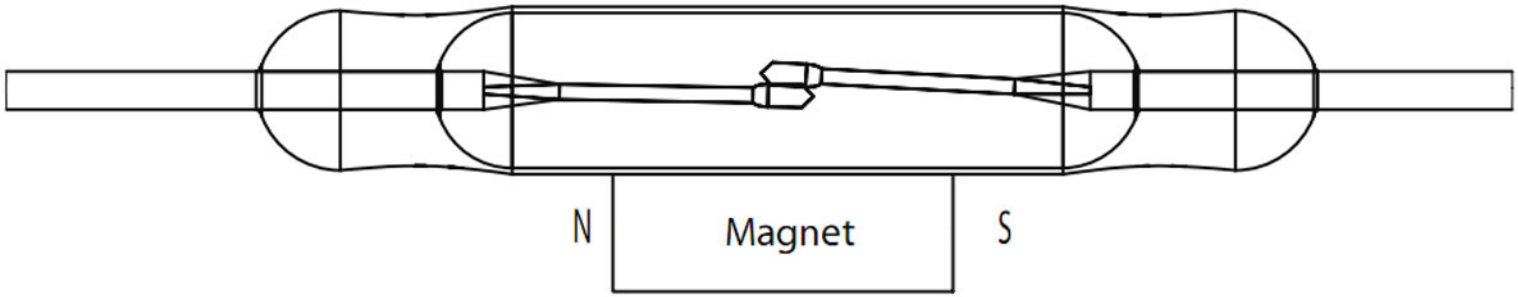

Form B Reed Sensors

- A latching reed sensor needs to follow the same rules we discussed for a latching reed relay.
- We need to use a biasing magnet biasing that is below pull-in mT level of the reed switch. Therefore the reed switch remains in the open state.

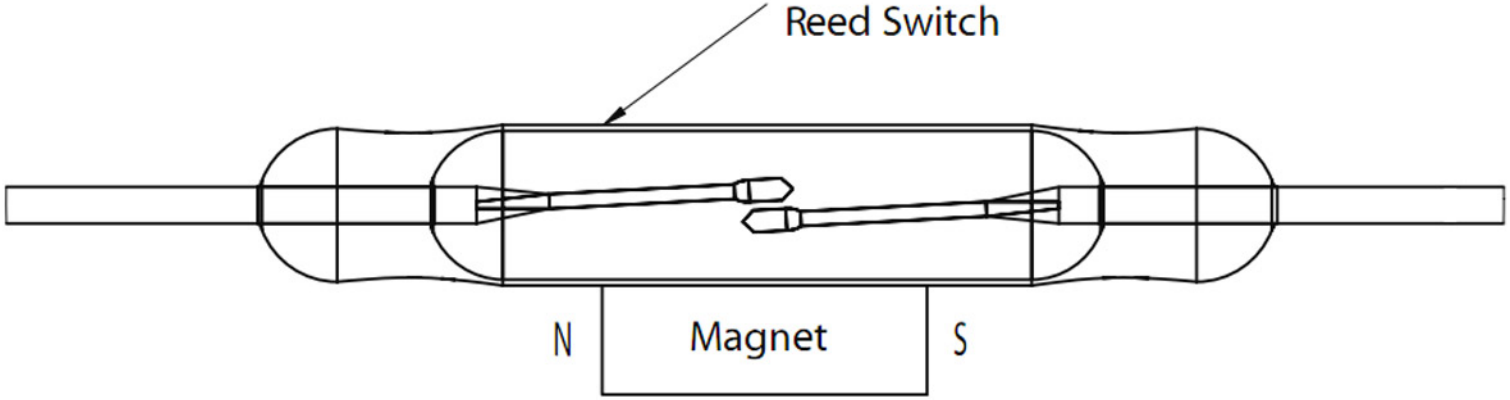

Form B Reed Sensors

- Applying a second magnet with an aiding field complementing the first magnet will close the contacts.

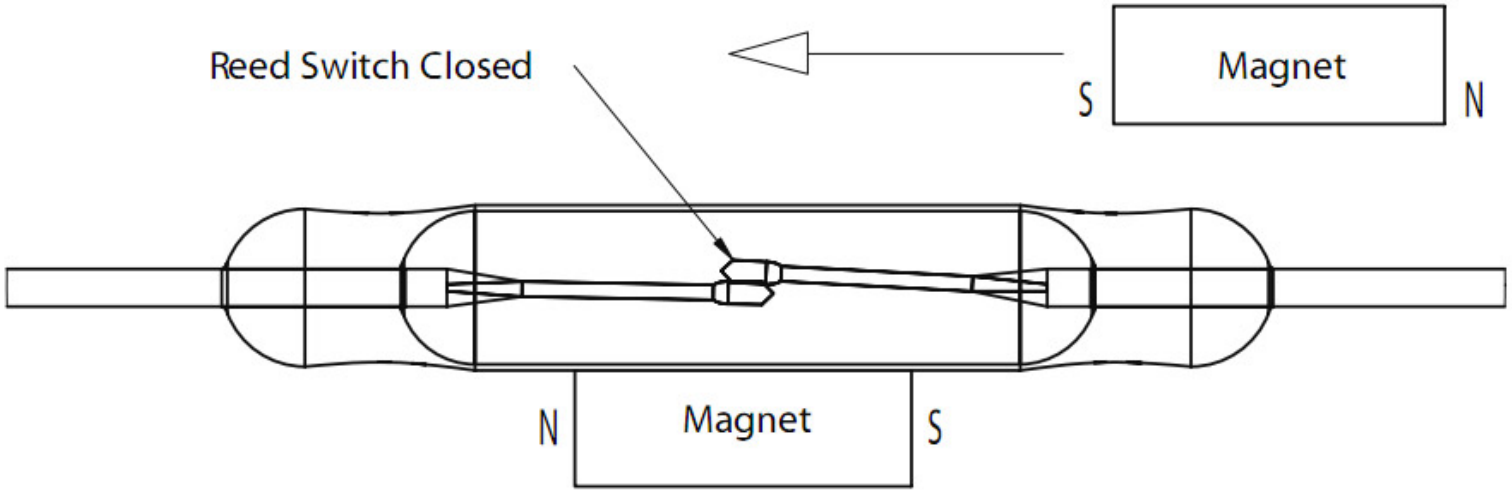

Form B Reed Sensors

- Removing the second magnet, the contacts will remain in the closed state.

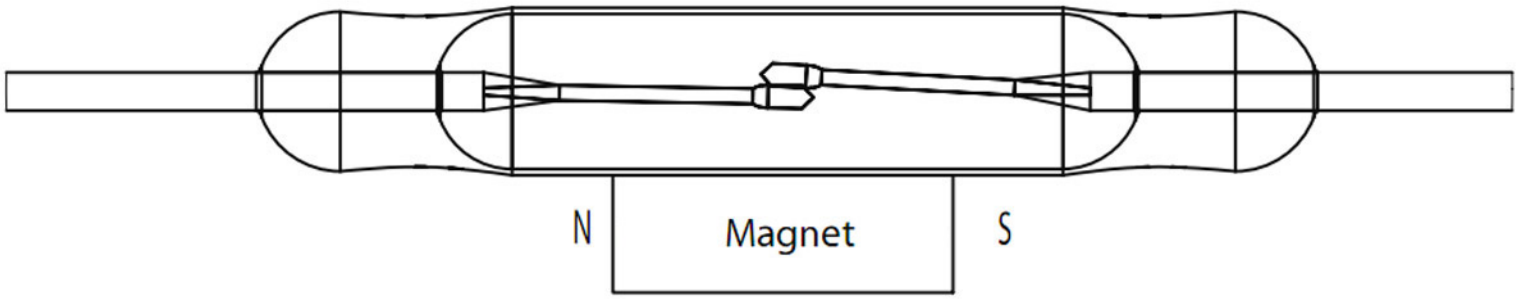

Form B Reed Sensors

- Applying the second magnet with its field reversed will now open the contacts.

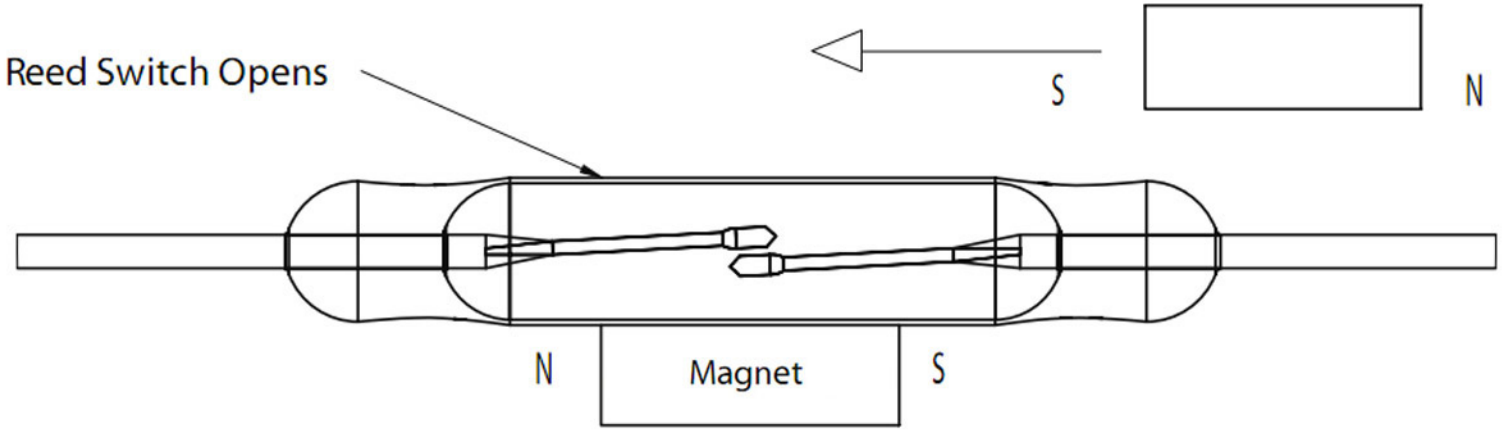

Form B Reed Sensors

- Removing the second magnet the contacts remain in the open state
- Using high mT pull-in switches may give the most stable conditions. The higher pull-in mT will give a wider hysteresis.

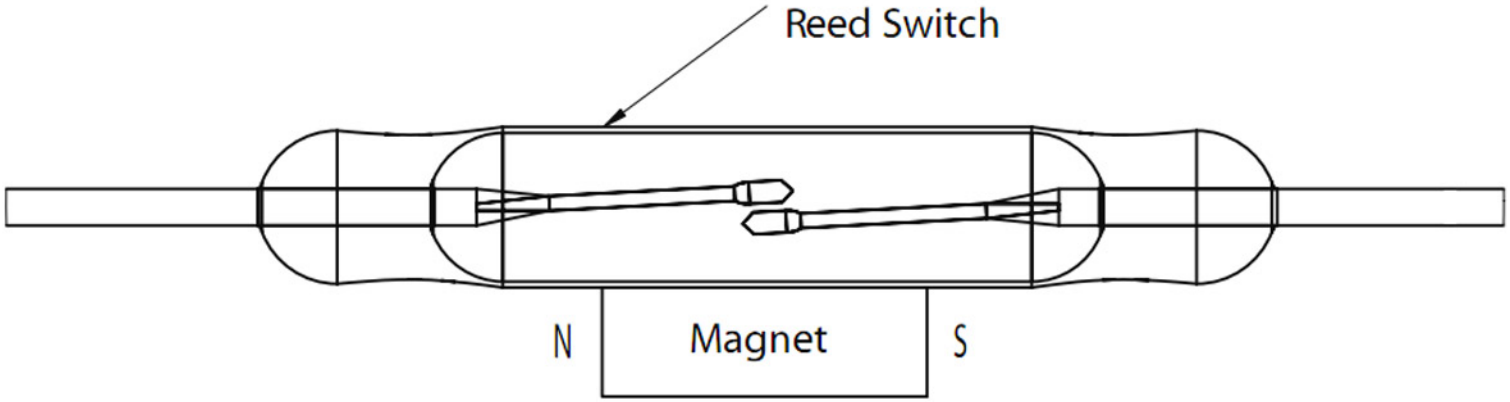

PARTNER | SOLVE | DELIVER

For more information on our capabilities, and how we can partner, solve, and deliver to your needs, please visit us at www.standexmeder.com