MINIATURE 400HZ power transformers

Type Designation
TF5S03ZZ-443
Thru 883

* Designed to meet the requirements of: MIL-T-27/37 thru MIL-T-27/47
* 308 standard designs from 1.5 VA thru 25 VA**, including a wide variety of output voltages offering maximum design flexibility.

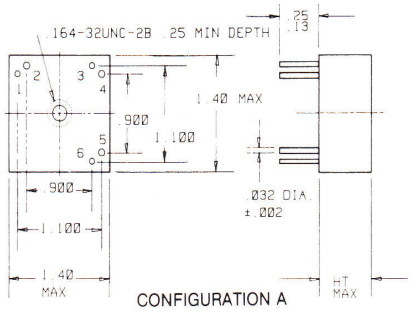

CONFIGURATION A

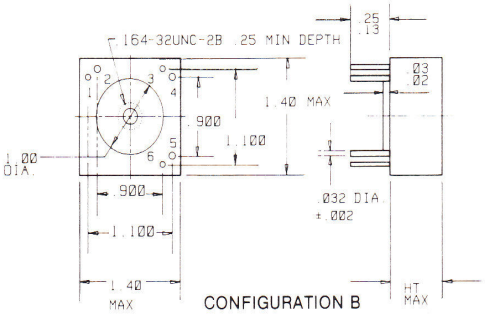

CONFIGURATION B

FIGURE 1. Dimensions and configuration.

CIRCUIT DIAGRAM AND MARKING

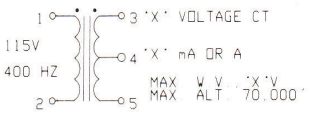

(SEE TABLE 2 FOR VALUE OF "X")

SEE ORDER INFO

CIRCUIT DIAGRAM AND MARKING

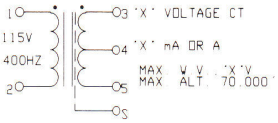

(SEE TABLE 2 FOR VALUE OF "X")

NOTE: TERMINAL MARKED #6 FIG #1, WILL BE MARKED S FOR SHIELD ON ALL UNITS WITH A SHIELD.

NOTES:
1. Dimensions are in inches.
2. Metric equivalents are given for general information only.
3. Tolerance on terminal position dimensions is ±.005 (0.13 mm).
4. Marking shall be on the side of the case.
5. A white dot shall be marked on the side opposite the terminals, over terminal 1, in addition to the terminal marking shown.
6. Secondary electrical values shall be marked as specified in table 2 as applicable.

INCHES	MM
.002	0.05
.02	0.5
.03	0.8
.032	0.81
.13	3.3
.164	4.17
.25	6.4
.900	22.86
.97	24.6
1.00	25.4
1.100	27.94
1.40	35.6

TABLE 1.

POWER	HEIGHT MAX	TEMP. RISE ° C MAX	WEIGHT OZ. MAX	EFF. % MIN	NO LOAD Ima rms MAX	REG. % MAX
16 VA NO SHIELD	0.97	32	3.4	87	16	8
16 VA WITH SHIELD	0.97	32	3.4	87	16	8
25 VA NO SHIELD	1.20	45	4.4	88	25	7
25 VA WITH SHIELD	1.20	45	4.4	88	25	7

ELECTRICAL CHARACTERISTICS

ELECTRICAL RATINGS: see table 2.
PRIMARY VOLTAGE: 115 volts ± 10%, 400 HZ ± 5%.
NO LOAD: with 115 volts, 400 HZ across 1-2, the current in 1-2 shall not exceed, see table 1.
RATED LOAD: with 115 volts, 400 HZ across 1-2 and a resistive load with current as specified in table 2 in 3-5, the voltage across 3-5 shall be as specified in table 2.
EFFICIENCY: % minimum at rated load, see tabel 1.
POLARITY: additive with terminals 2 and 3 connected
PHASE SHIFT: 1.0 degree between primary and secondary voltage at rated load, maximum.
TEMPERATURE RISE: degrees C maximum, see table 1.
REGULATION: % max, see table 1.

DESIGN AND CONSTRUCTION

DIMENSIONS AND CONFIGURATION: see figure 1.
WEIGHT: OUNCE maximum, see table 1.
ALTITUDE: 70,000 feet, maximum.
OPERATING TEMPERATURE RANGE: −55 C to +130 C maximum.
TERMINALS: printed circuit, tinned.
DIELECTRIC WITHSTANDING VOLTAGE: 2.8 x the maximum working voltage specified in tabel 2.

** 1.5 VA and 9 VA INFORMATION AVAILABLE UPON REQUEST.

Standex Electronics Inc.
4538 Camberwell Road
Cincinnati, Ohio 45209

www.StandexElectronics.com
513-871-3777 866-STANDEX
Fax 513-871-3779

a Standex company

Standex Electronics

a Standex company

TABLE 2. ELECTRICAL RATINGS

DASH # MIL SPECIFICATION	SECONDARY VOLTAGES 3-5 V rms	SECONDARY CURRENT 3-5 amps rms		WORKING VOLTAGE V rms
	± 3%	16 VA	25 VA	max
01 A or B	6	2.667	4.167	325
02 A or B	6.3	2.540	3.968	325
03 A or B	7	2.286	3.571	325
04 A or B	7.5	2.133	3.333	325
05 A or B	8	2.000	3.125	325
06 A or B	9	1.778	2.778	325
07 A or B	10	1.600	2.500	325
08 A or B	11	1.455	2.273	325
09 A or B	12	1.333	2.083	325
10 A or B	12.6	1.270	1.984	325
11 A or B	13	1.231	1.923	325
12 A or B	15	1.067	1.667	325
13 A or B	16	1.000	1.563	325
14 A or B	18	0.889	1.389	325
15 A or B	20	0.800	1.250	325
16 A or B	22	0.727	1.136	325
17 A or B	24	0.667	1.042	325
18 A or B	26	0.615	0.962	325
19 A or B	28	0.571	0.893	325
20 A or B	30	0.533	0.833	325
21 A or B	33	0.485	0.758	325
22 A or B	36	0.444	0.694	325
23 A or B	39	0.410	0.641	325
24 A or B	43	0.372	0.581	325
25 A or B	47	0.340	0.532	325
26 A or B	51	0.314	0.490	325
27 A or B	56	0.286	0.446	325
28 A or B	62	0.258	0.403	325
29 A or B	68	0.236	0.367	325
30 A or B	75	0.213	0.333	325
31 A or B	82	0.195	0.305	325
32 A or B	91	0.176	0.275	325
33 A or B	100	0.160	0.250	325
34 A or B	110	0.145	0.227	325
35 A or B	115	0.139	0.218	325
36 A or B	120	0.133	0.208	325
37 A or B	130	0.123	0.192	325
38 A or B	150	0.106	0.166	325
39 A or B	180	0.089	0.139	325
40 A or B	200	0.080	0.125	440
41 A or B	220	0.073	0.113	440
42 A or B	240	0.067	0.104	440
43 A or B	270	0.059	0.093	580
44 A or B	300	0.053	0.083	580

TABLE 3.

DASH # MIL SPECIFICATION	TYPE DESIGNATION TF5S03ZZ### * see note 4			
	16 VA		25 VA	
	NO SHIELD	WITH SHIELD	NO SHIELD	WITH SHIELD
01 A or B	708	752	796	840
02 A or B	709	753	797	841
03 A or B	710	754	798	842
04 A or B	711	755	799	843
05 A or B	712	756	800	844
06 A or B	713	757	801	845
07 A or B	714	758	802	846
08 A or B	715	759	803	847
09 A or B	716	760	804	848
10 A or B	717	761	805	849
11 A or B	718	762	806	850
12 A or B	719	763	807	851
13 A or B	720	764	808	852
14 A or B	721	765	809	853
15 A or B	722	766	810	854
16 A or B	723	767	811	855
17 A or B	724	768	812	856
18 A or B	725	769	813	857
19 A or B	726	770	814	858
20 A or B	727	771	815	859
21 A or B	728	772	816	860
22 A or B	729	773	817	861
23 A or B	730	774	818	862
24 A or B	731	775	819	863
25 A or B	732	776	820	864
26 A or B	733	777	821	865
27 A or B	734	778	822	866
28 A or B	735	779	823	867
29 A or B	736	780	824	868
30 A or B	737	781	825	869
31 A or B	738	782	826	870
32 A or B	739	783	827	871
33 A or B	740	784	828	872
34 A or B	741	785	829	873
35 A or B	742	786	830	874
36 A or B	743	787	831	875
37 A or B	744	788	832	876
38 A or B	745	789	833	877
39 A or B	746	790	834	878
40 A or B	747	791	835	879
41 A or B	748	792	836	880
42 A or B	749	793	837	881
43 A or B	750	794	838	882
44 A or B	751	795	839	883

ORDER INFORMATION:

POWER SIZE		STANDEX PN *see note 1 & 3	SPEC. SHEET NO. *see note 2 & 3
16 VA	NO SHIELD	MG14785- *** A OR B	M27/44- ## A OR B
16 VA	WITH SHIELD	MG14786- *** A OR B	M27/45- ## A OR B
25 VA	NO SHIELD	MG14787- *** A OR B	M27/46- ## A OR B
25 VA	WITH SHIELD	MG14788- *** A OR B	M27/47- ## A OR B

* NOTES:

1. *** = SECONDARY OUTPUT VOLTAGES, SEE TABLE 2, EXAMPLE 14785 - 12.6A = 16 VA UNIT NO SHIELD, 12.6 VRMS SECONDARY OUTPUT VOLTAGE WITH CONFIGURATION A PER FIGURE 1.
2. ## = DASH #, SEE TABLE 2.
3. A OR B = CONFIGURATION, SEE FIGURE 1.
4. TYPE DESIGNATION: TF5S03ZZ###, EXAMPLE: TF5S03ZZ708 = 16 VA UNIT WITH NO SHIELD AND DASH 01 SECONDARY OUTPUT VOLTAGE.

CUSTOM DESIGNS AVAILABLE

Standex Electronics Inc.
4538 Camberwell Road
Cincinnati, Ohio 45209

www.StandexElectronics.com
513-871-3777 866-STANDEX
Fax 513-871-3779